ITEM	Description	ARTICLE NUMBER	Material	Stocksize	Testpen/Pneumatiek	Magazijnlocatie	Artikelgroep	QTY.
1	Pre-centering pin	40330253 - 00076	Delrin (wit)	10 x 10 x 20	-	Stelling 6, B-2	Maakdeel	1

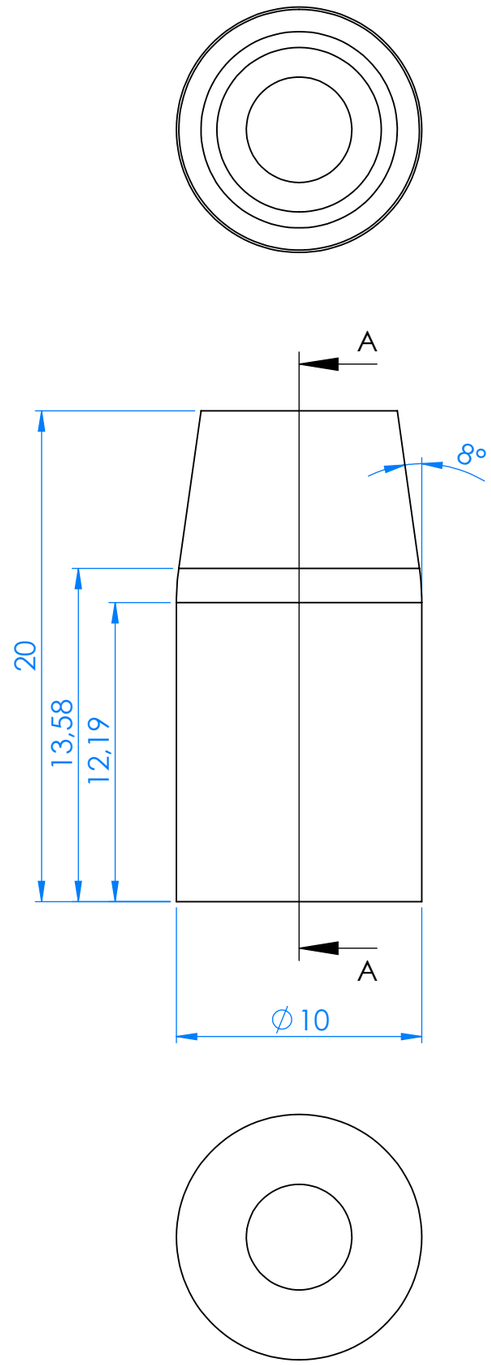

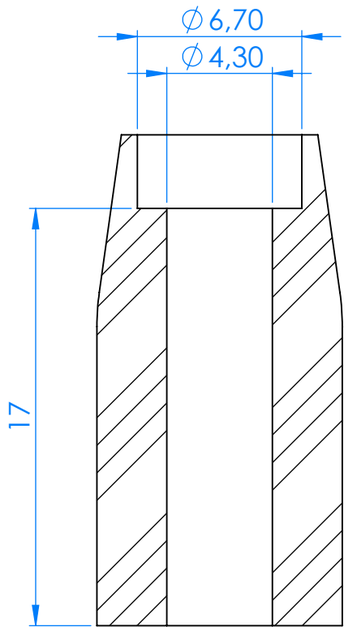

SECTION A-A

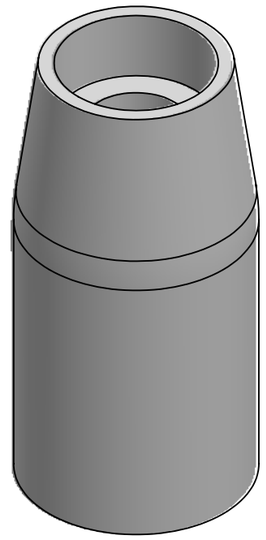

DFT DESIGNED FOR TEST PART OF MG-PRODUCTS

Created by:	Tim Vriens
Creation date:	12-3-2019 14:24:15
Last save date:	21-6-2021 16:45:29
REVISION:	A
MATERIAL:	Delrin (wit)

CUSTOMER: 6TL Fixtures

TITLE: Pre-centering pin (Inleghulpjes)

P/N: 40330253 - 00076

TOLERANCES AND DIMENSIONS (unless otherwise specified) ACCORDING TO: DIN ISO-2768-fh

Size A3

SCALE: 4:1 | WEIGHT: | UNITS: mm, gram | SHEET 1 OF 1